DIMENSIONS:	
A	6.000" ±0.063
B	7.625" ±0.125
C	5.160" ±0.063
D	5.000" ±0.063
E	5.814" ±0.063
F	6.938" ±0.063
G	0.281" X 0.563" ±0.015
H	1.500" TYP.

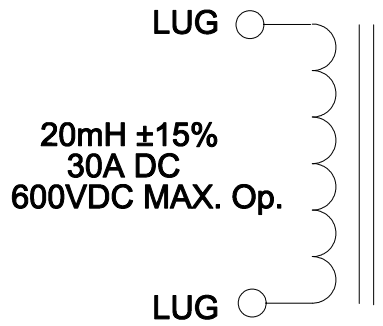

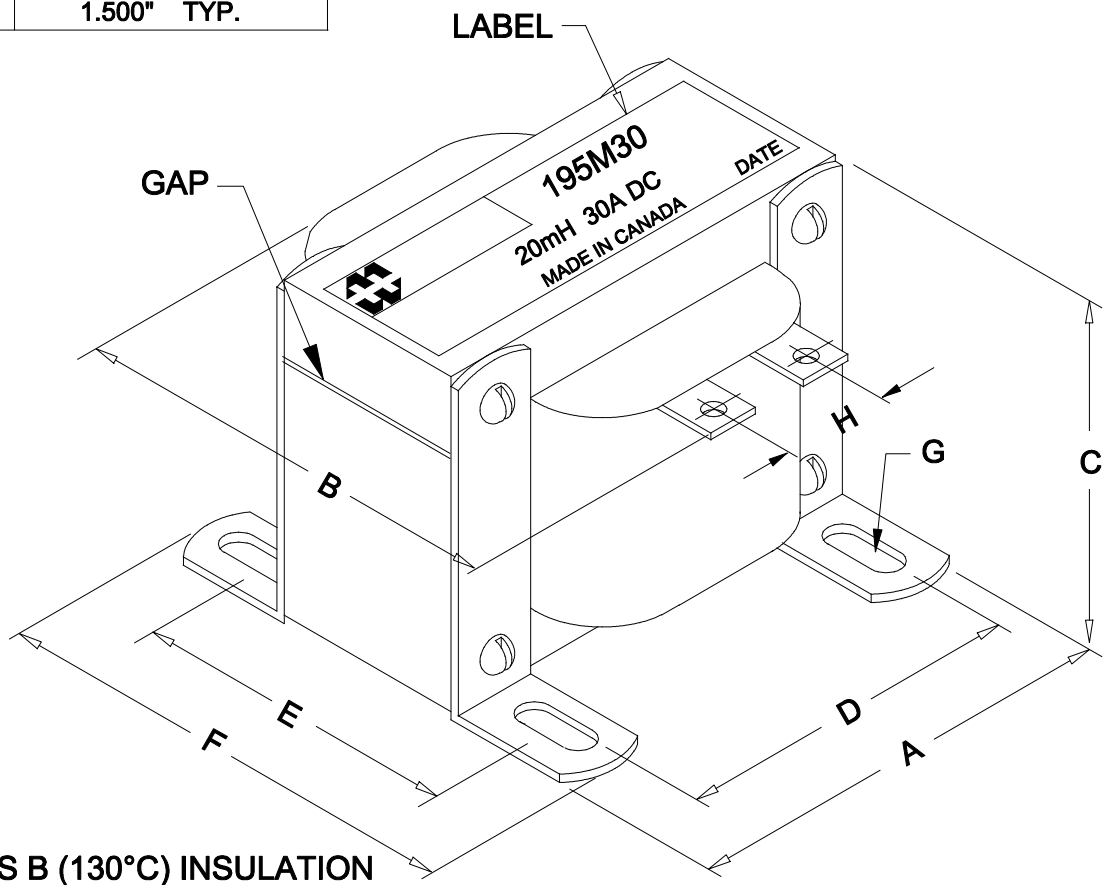

CLASS B (130°C) INSULATION
RoHS COMPLIANT

ELECTRICAL DATA:		
TESTS	CONDITIONS	ACCEPTANCE CRITERIA
INDUCTANCE	@ 5V, 60Hz, 30A DC, LUG - LUG	20mH ±15%
DCR	@ 20°C, LUG - LUG =	0.065 Ω ±15%
HIPOT	PRIMARY - CORE	2500V, 60Hz, 1 SEC

HAMMOND MANUFACTURING T.M.
ELECTRONIC DIVISION
52 RANKIN PLACE,
WATERLOO, ONTARIO, N2J 3Z5
PH # (519) 886-6181
FAX # (519) 886-9540

TITLE: CHOKE

NO	DATE	REVISION	
0	06/18/15	RELEASED.	C.I.

DWG. BY: CORINA ILIE
DATE: 06/18/15
DIM IN(X)MM( )

195M30