DIMENSIONS:	
A	5.250" ±0.063
B	6.500" ±0.125
C	4.438" ±0.063
D	4.375" ±0.063
E	4.625" ±0.063
F	5.750" ±0.063
G	0.281" X 0.563" ±0.015
H	1.500" ±0.063

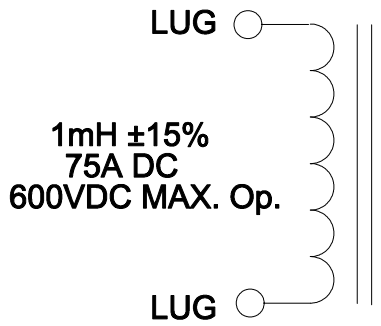

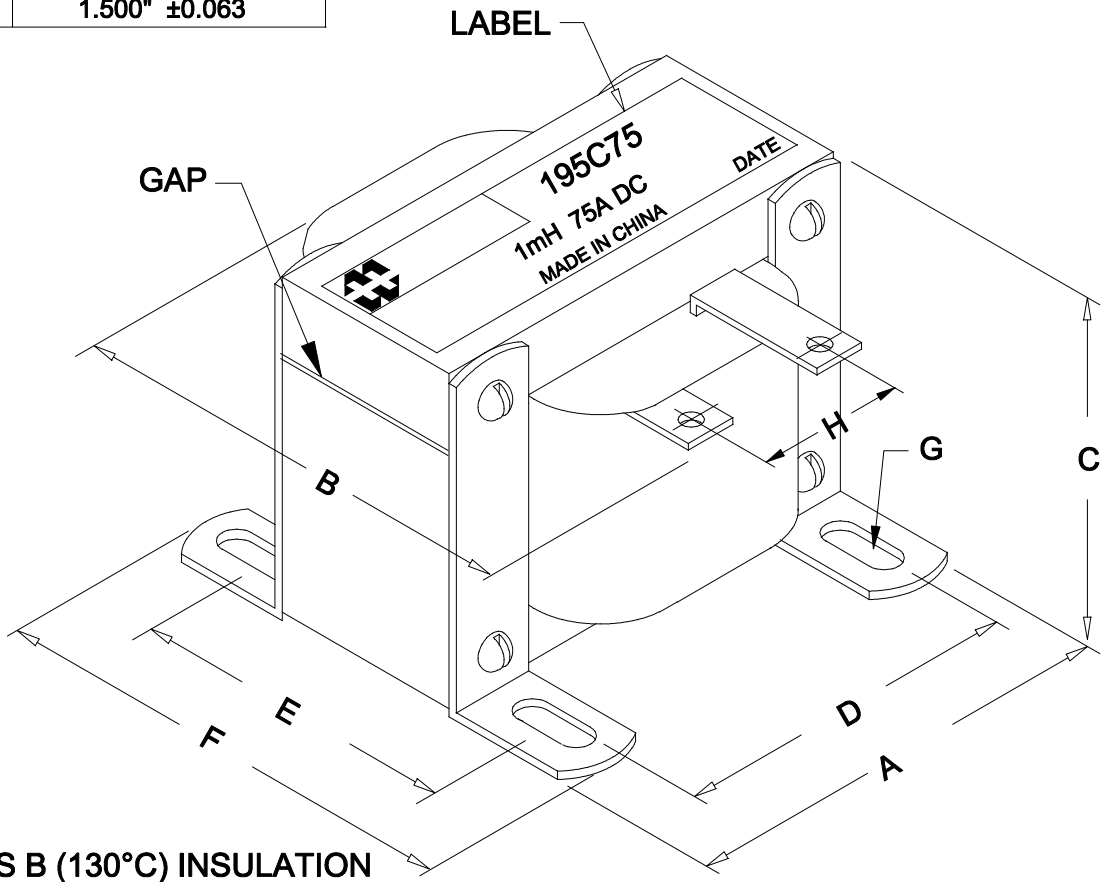

CLASS B (130°C) INSULATION
RoHS COMPLIANT

ELECTRICAL DATA:		
TESTS	CONDITIONS	ACCEPTANCE CRITERIA
INDUCTANCE	@ 5V, 60Hz, 75A DC, LUG - LUG	1mH ±15%
DCR	@ 20°C, LUG - LUG =	0.004 Ω ±15%
HIPOT	PRMARY - SECONDARY	2500V, 60Hz, 1 SEC

HAMMOND MANUFACTURING T.M.
ELECTRONIC DIVISION
52 RANKIN PLACE,
WATERLOO, ONTARIO, N2J 3Z5
PH # (519) 886-6181
FAX # (519) 886-9540

TITLE: CHOKE

NO	DATE	REVISION	
0	07/03/14	RELEASED.	C.I.

DWG. BY: CORINA ILIE
DATE: 07/03/14
DIM IN(X)MM( )

195C75