.098"(2.50mm) pitch Wire to Board Connectors

CH325 Series
* Poles:2-20
* Material:NYLON 66 UL 94V-2
* Suitable CT325AT series terminal
* Mates with CW325X-XX series wafer

Specifications
* Current rating: 3A AC, DC
* Voltage rating: 250V AC, DC
* Temperature range: -25°C~+85°C
* Insulation resistance: 1,000MΩ min.
* Withstand voltage: 800V AC/minute

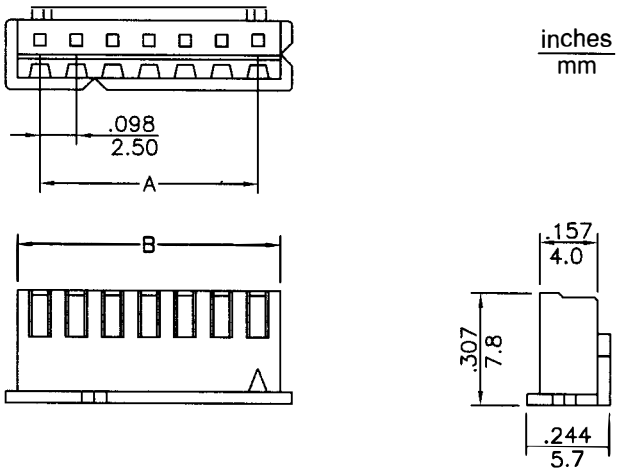

CIRCUITS	PART NO.	DIMENSION in.(mm)		CIRCUITS	PART NO	DIMENSION in.(mm)	
		A	B			A	B
2	CH325-02	0.098(2.50)	0.222(5.65)	11	CH325-11	0.984(25.00)	1.108(28.15)
3	CH325-03	0.197(5.00)	0.321(8.15)	12	CH325-12	1.083(27.50)	1.207(30.65)
4	CH325-04	0.295(7.50)	0.419(10.65)	13	CH325-13	1.181(30.00)	1.305(33.15)
5	CH325-05	0.394(10.00)	0.518(13.15)	14	CH325-14	1.280(32.50)	1.404(35.65)
6	CH325-06	0.492(12.50)	0.616(15.65)	15	CH325-15	1.378(35.00)	1.502(38.15)
7	CH325-07	0.591(15.00)	0.715(18.15)	16	CH325-16	1.480(37.50)	1.600(40.65)
8	CH325-08	0.689(17.50)	0.813(20.65)	17	CH325-17	1.578(40.00)	1.699(43.15)
9	CH325-09	0.787(20.00)	0.911(23.15)	18	CH325-18	1.680(42.50)	1.797(45.65)
10	CH325-10	0.886(22.50)	1.010(25.65)	20	CH325-20	1.880(47.50)	1.994(50.65)

.098"(2.50mm) pitch crimp terminal
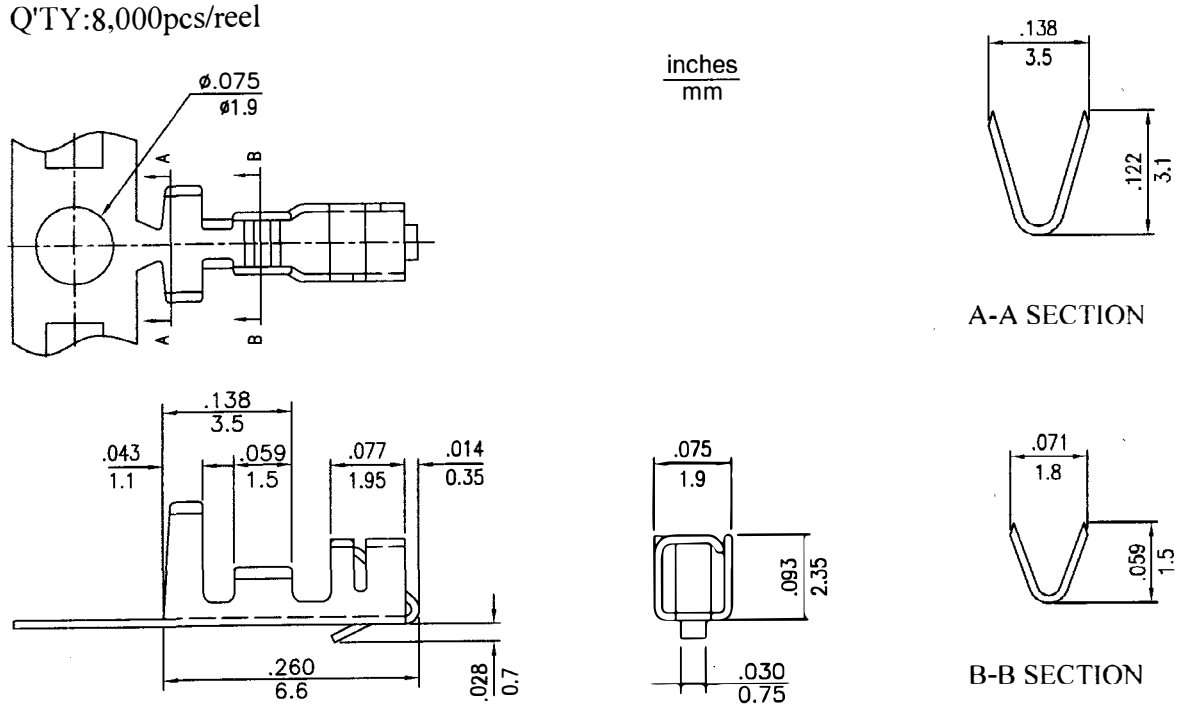
CT325AT Series
* Material:Phos bronze
* Finished:Tin-plated
* Used in CH325-XX series housings
* Wire Range:AWG#22~#28
* Insulation O.D:1.90mm(max)
* Thickness:0.2mm
* Q'TY:8,000pcs/reel