Distributed by:

JAMECO® ELECTRONICS

www.Jameco.com ✦ 1-800-831-4242

The content and copyrights of the attached material are the property of its owner.

Jameco Part Number 738700

THIS DRAWING IS UNPUBLISHED. RELEASED FOR PUBLICATION -,- .
© COPYRIGHT - BY TYCO ELECTRONICS CORPORATION. ALL RIGHTS RESERVED.

LOC	DIST
AD	00

REVISIONS

P	LTR	DESCRIPTION	DATE	DWN	APVD
	N	ECR-05-000991, ECR-05-003293	01JUN05	MB	DLS

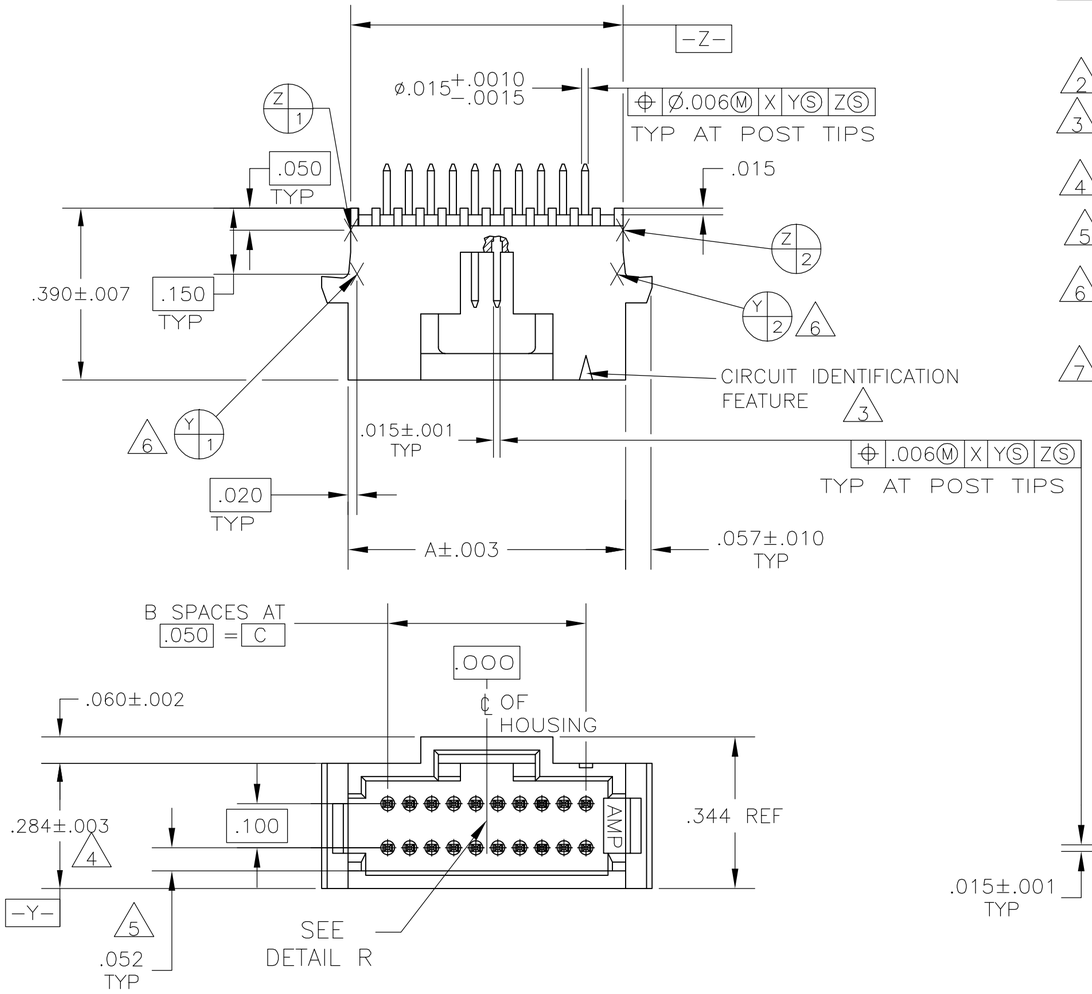

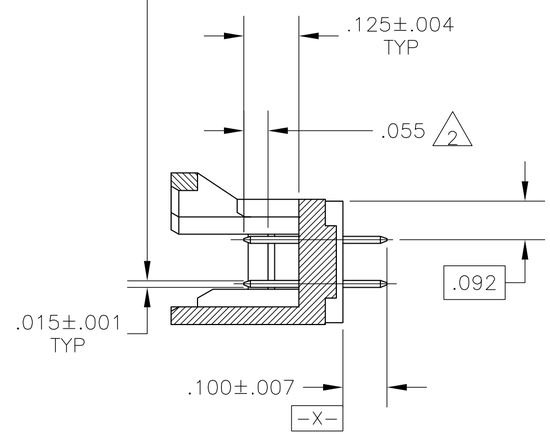

1. CONTACT AREA PLATED WITH .000030 MIN GOLD; SOLDER TAILS PLATED WITH .000150 MIN TIN-LEAD, ALL OVER .000050 MIN NICKEL
2. POINT OF MEASUREMENT FOR PLATING THICKNESS
3. CIRCUIT IDENTIFICATION FEATURE OMITTED ON 8,10,12 AND 14 POSN HEADER ASSEMBLIES
4. DIMENSION APPLIES AT BASE OF SHROUD
5. THE NOTED DIMENSIONS APPLY AT THE INTERSECTION OF THE POST AND HOUSING
6. (Y 3) (Y 4) ARE LOCATED THE SAME AS (Y 1) (Y 2) EXCEPT ON OPPOSITE SIDE OF HOUSING.
7. CONTACT AREA PLATED WITH .000030 MIN. GOLD; SOLDER TAILS PLATED WITH .000150 MIN TIN; ALL OVER .000050 MIN NICKEL

	1.650	33	1.830	68	6-104068-8
	2.450	49	2.630	100	6-104068-7
	1.950	39	2.130	80	6-104068-6
	1.750	35	1.930	72	6-104068-5
	1.050	21	1.230	44	6-104068-4
	.800	16	.980	34	6-104068-3
	.600	12	.780	26	6-104068-2
7 2	.550	11	.730	24	6-104068-1
	.350	7	.530	16	6-104068-0
	.300	6	.480	14	5-104068-9
	.250	5	.430	12	5-104068-8
PRELIMINARY	.150	3	.330	8	5-104068-7
	1.450	29	1.630	60	5-104068-6
	1.200	24	1.380	50	5-104068-5
	.950	19	1.130	40	5-104068-4
7 2	.700	14	.880	30	5-104068-3
	.200	4	.380	10	5-104068-2
	.450	9	.630	20	5-104068-1
	1.650	33	1.830	68	1-104068-8
	2.450	49	2.630	100	1-104068-7
	1.950	39	2.130	80	1-104068-6
	1.750	35	1.930	72	1-104068-5
	1.050	21	1.230	44	1-104068-4
	.800	16	.980	34	1-104068-3
	.600	12	.780	26	1-104068-2
1 2	.550	11	.730	24	1-104068-1
	.350	7	.530	16	1-104068-0
	.300	6	.480	14	104068-9
	.250	5	.430	12	104068-8
OBSOLETE	.150	3	.330	8	104068-7
	1.450	29	1.630	60	104068-6
	1.200	24	1.380	50	104068-5
	.950	19	1.130	40	104068-4
1 2	.700	14	.880	30	104068-3
	.200	4	.380	10	104068-2
	.450	9	.630	20	104068-1
FINISH	C	B	A	NO OF POS	PART NUMBER

104068

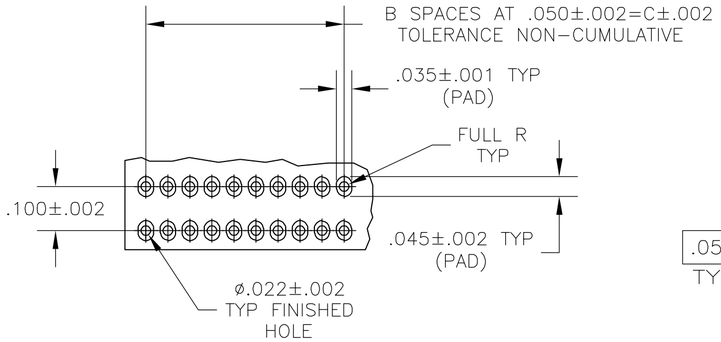

RECOMMENDED HOLE PATTERN

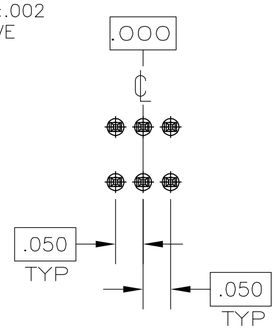

BASIC DIMENSIONS FOR EVEN NO OF SPACES (SEE TABLE)

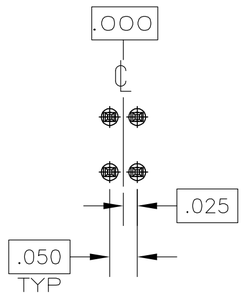

BASIC DIMENSIONS FOR ODD NO OF SPACES (SEE TABLE)

DETAIL R

THIS DRAWING IS A CONTROLLED DOCUMENT.

DIMENSIONS: INCHES

TOLERANCES UNLESS OTHERWISE SPECIFIED:
0 PLC ± -
1 PLC ± -
2 PLC ± -
3 PLC ± -
4 PLC ± -
ANGLES ± -

MATERIAL: HOUSING: THERMOPLASTIC COLOR-BLACK; POST: COPPER ALLOY

FINISH: SEE TABLE

DWN	D. CLOUSER	10-3-88
CHK	T. ZOLA	10-3-88
APVD	T. ZOLA	10-3-88

PRODUCT SPEC: 108-1093
APPLICATION SPEC: 114-25031
WEIGHT: -

CUSTOMER DRAWING

tyco Electronics — Tyco Electronics Corporation, Harrisburg, Pa 17105-3608

NAME: HEADER ASSEMBLY, VERTICAL SHROUDED, DOUBLE ROW W/SIDE & END LATCHES, AMPMODU System 50

SIZE	CAGE CODE	DRAWING NO	RESTRICTED TO
A2	00779	C-104068	-

SCALE 4:1 SHEET 1 OF 1 REV N