HAMMOND MANUFACTURING AUTO TRANSFORMER
175F-NA
INPUT 230V 50/60Hz 1000VA
OUTPUT 115V 8.7A
DATE MADE IN CANADA
c UL us LISTED (POWER SUPPLY) 89PN

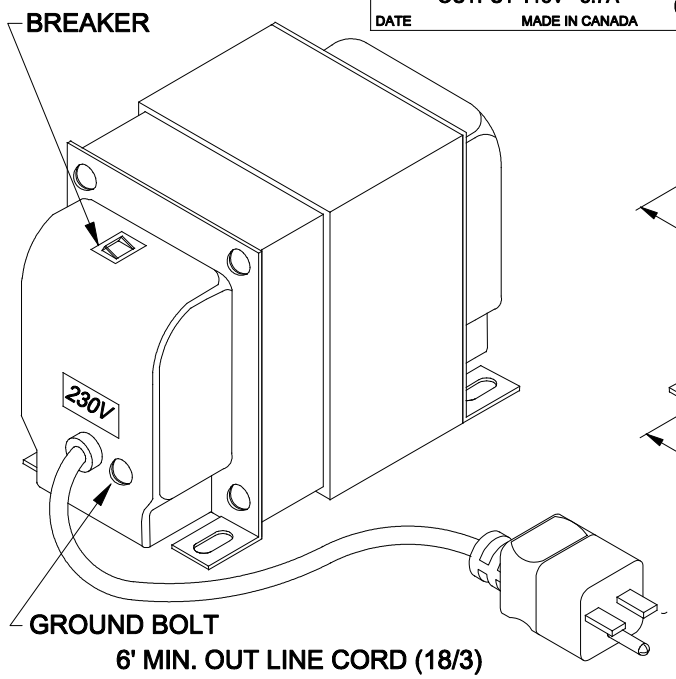

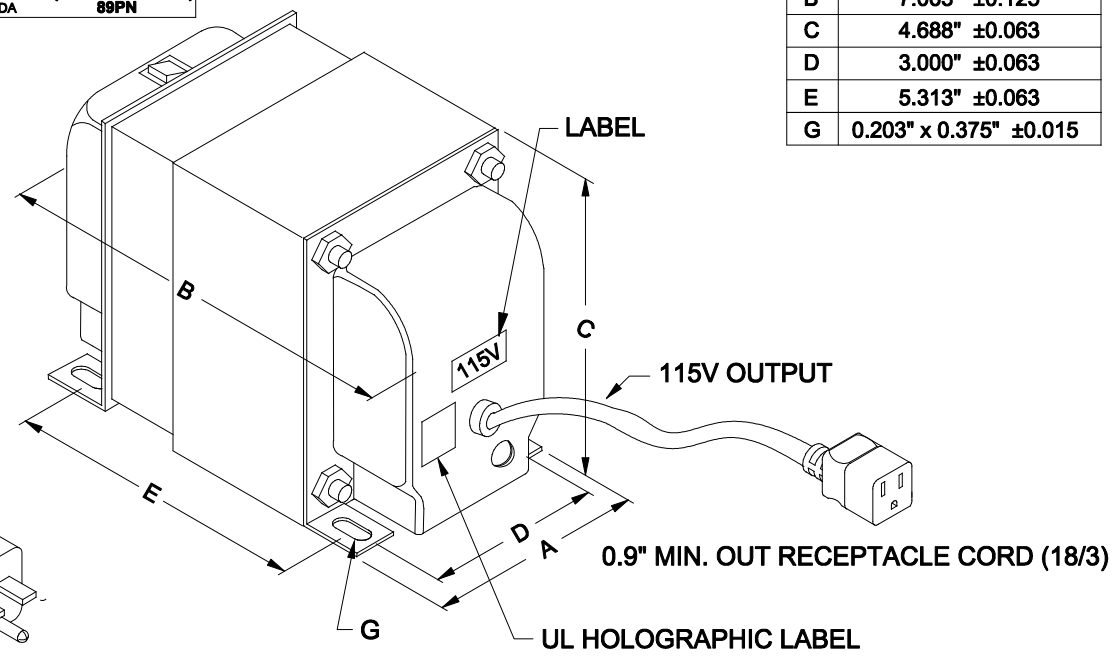

DIMENSIONS:	
A	3.800" ±0.063
B	7.063" ±0.125
C	4.688" ±0.063
D	3.000" ±0.063
E	5.313" ±0.063
G	0.203" x 0.375" ±0.015

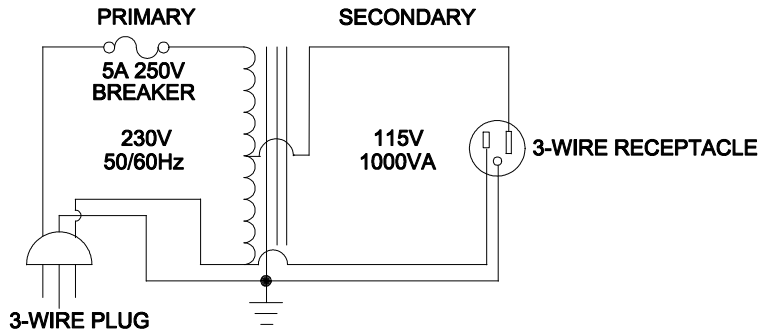

ELECTRICAL DATA:

TESTS	CONDITIONS	ACCEPTANCE CRITERIA	
Iex	@ 230V, 60Hz, TO CORD PLUG	658mA	MAX.
Sec. N.L.V	@ 230V, 60Hz, TO CORD PLUG		
	RECEPTACLE PLUG =	118.14V	±2%
DCR	@ 20°C, TO CORD PLUG =	0.640 Ω	±20%
	@ 20°C, RECEPTACLE PLUG =	0.330 Ω	±20%
HIPOT	PRIMARY - SECONDARY	2000V, 60Hz, 1 SEC	

REV.NO.	REVISION		DATE
0	RELEASED.	C.I.	10/30/18

Hammond Electronics Waterloo, Ontario Canada

DWG. BY: C. ILIE
DATE: 10/30/18
CHK'D BY:
APP'D. BY:

TITLE: AUTO-TRANSFORMER STEP UP - PLUG IN

175F-NA

SH 1 OF 1