Distributed by:

JAMECO® ELECTRONICS

www.Jameco.com ✦ 1-800-831-4242

The content and copyrights of the attached material are the property of its owner.

Jameco Part Number 518301

19420

STRIP MATERIAL NUMBER	LOOSE PIECE MATERIAL NUMBER	AWG SIZE	FINISH	DIM. "A"	DIM. "B"	DIM. "C"	DIM. "D"
194200001	194200009	16-14	PREPLATED TIN 75µ" MIN THICK OVER NICKEL FLASH	.235/5.97	.182/4.62	.141/3.58	.155/3.94
194200002	194200010	22-18		.179/4.55	.143/3.63	.098/2.50	.106/2.70
194200003	194200011	16-14	SELECT HARD GOLD 30µ" MIN. THICK WITH SELECT TIN 100µ" MIN. OVER NICKEL 50µ" MIN. OVERALL	.235/5.97	.182/4.62	.141/3.58	.155/3.94
194200004	194200012	22-18		.179/4.55	.143/3.63	.098/2.50	.106/2.70

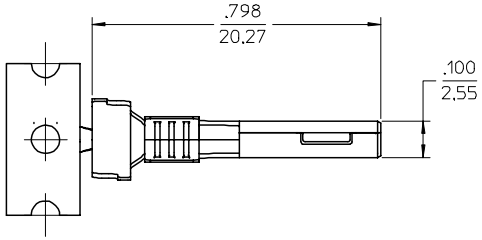

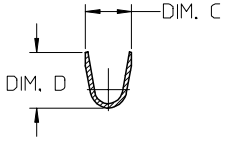

SECTION A-A

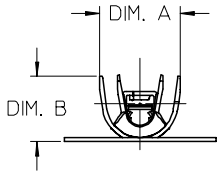

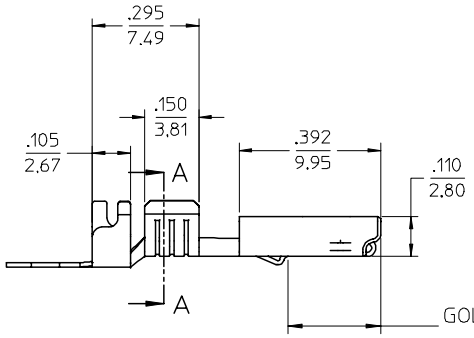

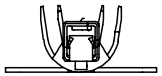

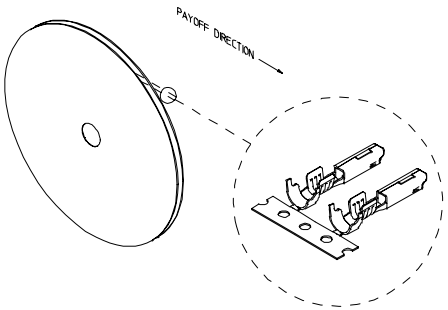

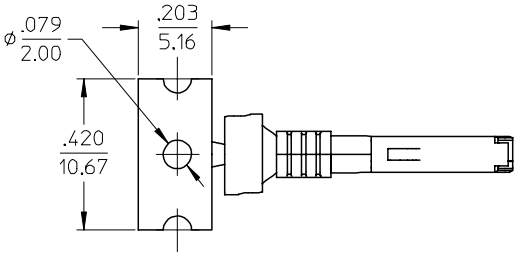

NOTES:

1. MATERIAL: COPPER ALLOY .0098/0.249 THK.
2. FINISH: SEE CHART.
3. TERMINALS FOR USE WITH 19418-**** RECEPTACLE HOUSING ASSEMBLY.
4. STRIP TERMINALS ARE REELED AS SHOWN ABOVE ON 24" REELS, 4000 PARTS PER REEL.
5. LOOSE TERMINALS ARE BULK PACKAGED IN QUANTITIES OF 400.
6. APPLICATION TOOLING AND CRIMP SPECIFICATIONS: 63865-6200 (14-16 AWG), 63865-6300 (14-16 AWG), 63811-4000 (HAND TOOL).

EC NO: ETC2004-0249
DRWN: JPAWLICK 2004/06/25
CHKD: JPAWLICK 2004/06/25
APPR: RDEROSS 2004/06/25
DESCRIPTION
REV B

QUALITY SYMBOLS: ▼ - 0; ⊂/ - 0

GENERAL TOLERANCES (UNLESS SPECIFIED)

	mm	INCH
4 PLACES	± ---	± ---
3 PLACES	± ---	± .010
2 PLACES	± 0.25	± .02
1 PLACE	± 0.5	± ---
ANGULAR ± 3 °		

DRAFT WHERE APPLICABLE
MUST REMAIN WITHIN DIMENSIONS

SCALE 4:1 | DESIGN UNITS INCH | DIMENSION STYLE IN/MM

DRAWN BY JPAWLICK DATE 05/05/03
CHECKED BY JPAWLICK DATE 05/05/03
APPROVED BY RDEROSS DATE 05/05/03

THIRD ANGLE PROJECTION | REVISE ON CAD ONLY

TITLE: FEMALE RECEPTACLE TERMINAL, 22-18 & 16-14 AWG, .059/1.50X.031/0.79

MOLEX INCORPORATED

MATERIAL NO. SEE CHART | DOCUMENT NO. SD-19420-001 | SHEET NO. 1 OF 1

THIS DRAWING CONTAINS INFORMATION THAT IS PROPRIETARY TO MOLEX INCORPORATED AND SHOULD NOT BE USED WITHOUT WRITTEN PERMISSION

C

tb_frame_C-B1
rev. B1 2000/08/01