Distributed by:

JAMECO® ELECTRONICS

www.Jameco.com ✦ 1-800-831-4242

The content and copyrights of the attached material are the property of its owner.

Jameco Part Number 518088

19417

STRIP MATERIAL NUMBER	LOOSE PIECE MATERIAL NUMBER	AWG SIZE	FINISH	DIM. "A"	DIM. "B"	DIM. "C"	DIM. "D"	DIM. "E"	DIM. "F"
194170011	194170047	16-14	PREPLATED TIN 75µ" MIN. THICK OVER NICKEL FLASH	.230/5.84	.182/4.62	.141/3.58	.155/3.94	.591/15.00	1.000/25.40
194170024	194170048	22-18		.181/4.60	.143/3.63	.108/2.74	.112/2.84	.591/15.00	1.000/25.40
194170025	194170049	16-14	SELECT HARD GOLD 30µ" MIN. THICK WITH SELECT TIN 100µ" MIN. THICK OVER NICKEL 50µ" MIN. THICK OVERALL	.230/5.84	.182/4.62	.141/3.58	.155/3.94	.591/15.00	1.000/25.40
194170026	194170050	22-18		.181/4.60	.143/3.63	.108/2.74	.112/2.84	.591/15.00	1.000/25.40
194170027	194170051	16-14	PREPLATED TIN 75µ" MIN. THICK OVER NICKEL FLASH	.230/5.84	.182/4.62	.141/3.58	.155/3.94	.621/15.77	1.030/26.16
194170028	194170052	22-18		.181/4.60	.143/3.63	.108/2.74	.112/2.84	.621/15.77	1.030/26.16
194170029	194170053	16-14	SELECT HARD GOLD 30µ" MIN. THICK WITH SELECT TIN 100µ" MIN. THICK OVER NICKEL 50µ" MIN. THICK OVERALL	.230/5.84	.182/4.62	.141/3.58	.155/3.94	.621/15.77	1.030/26.16
194170030	194170054	22-18		.181/4.60	.143/3.63	.108/2.74	.112/2.84	.621/15.77	1.030/26.16

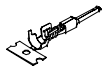

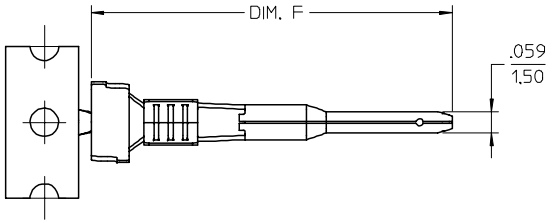

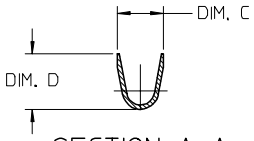

SECTION A-A

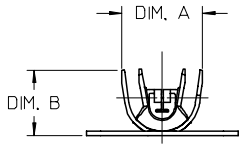

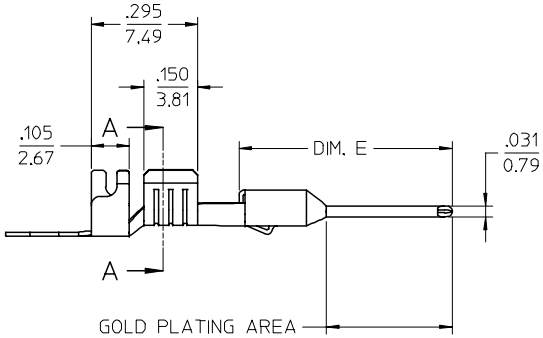

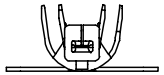

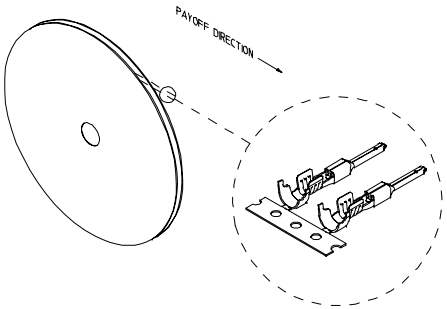

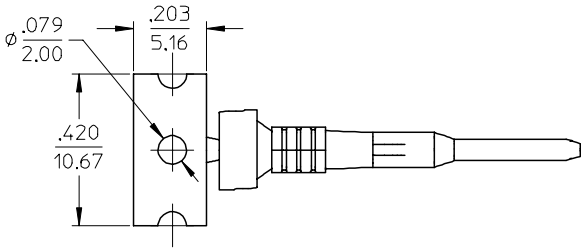

NOTES:
1. MATERIAL: COPPER ALLOY .012/0.30 THK.
2. FINISH: SEE CHART
3. TERMINAL FOR USE WITH 19419-**** PLUG HOUSING ASSEMBLY.
4. STRIP TERMINALS ARE REELED AS SHOWN ABOVE ON 24" REELS, 4000 PARTS PER REEL.
5. LOOSE TERMINALS ARE BULK PACKAGED IN QUANTITIES OF 400.
6. APPLICATION TOOLING AND CRIMP SPECIFICATIONS: 63865-6000 (14-16 AWG), 63865-6100 (18-22 AWG), 63811-3900 (HAND TOOL).

EC NO: ETC2004-0249
DRWN: JPAWLICK 2004/06/25
CHKD: JPAWLICK 2004/06/25
APPR: RDEROSS 2004/06/25
DESCRIPTION
REV B

QUALITY SYMBOLS: ▼ - 0 ; C - 0

GENERAL TOLERANCES (UNLESS SPECIFIED)

	mm	INCH
4 PLACES	± ---	± ---
3 PLACES	± ---	± .010
2 PLACES	± 0.25	± .02
1 PLACE	± 0.5	± ---
ANGULAR ± 3 °		

DRAFT WHERE APPLICABLE
MUST REMAIN WITHIN DIMENSIONS

SCALE 4:1 | DESIGN UNITS INCH | DIMENSION STYLE IN/MM

THIRD ANGLE PROJECTION | REVISE ON CAD ONLY

TITLE: MALE PIN TERMINAL, 22-18 & 16-14 AWG, .059/1.50 X .031/0.79

DRAWN BY JPAWLICK 05/05/03
CHECKED BY JPAWLICK 05/05/02
APPROVED BY RDEROSS 05/05/03

molex MOLEX INCORPORATED

MATERIAL NO. SEE CHART | DOCUMENT NO. SD-19417-001 | SHEET NO. 1 OF 1

THIS DRAWING CONTAINS INFORMATION THAT IS PROPRIETARY TO MOLEX INCORPORATED AND SHOULD NOT BE USED WITHOUT WRITTEN PERMISSION

C

tb_frame_C-B1
rev. B1 2000/08/01