REV.	DESCRIPTION	ECN CORE	DATE

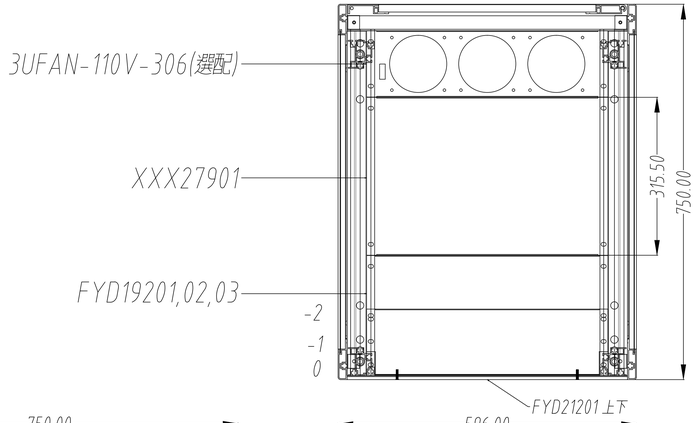

注意事項：

1.SA26-3PPUMBSH 3"煞車輪 X 2顆

SA26-3PPUMASH 3"活動輪 X 2顆

RA-FLOORSTAND-1 X 4

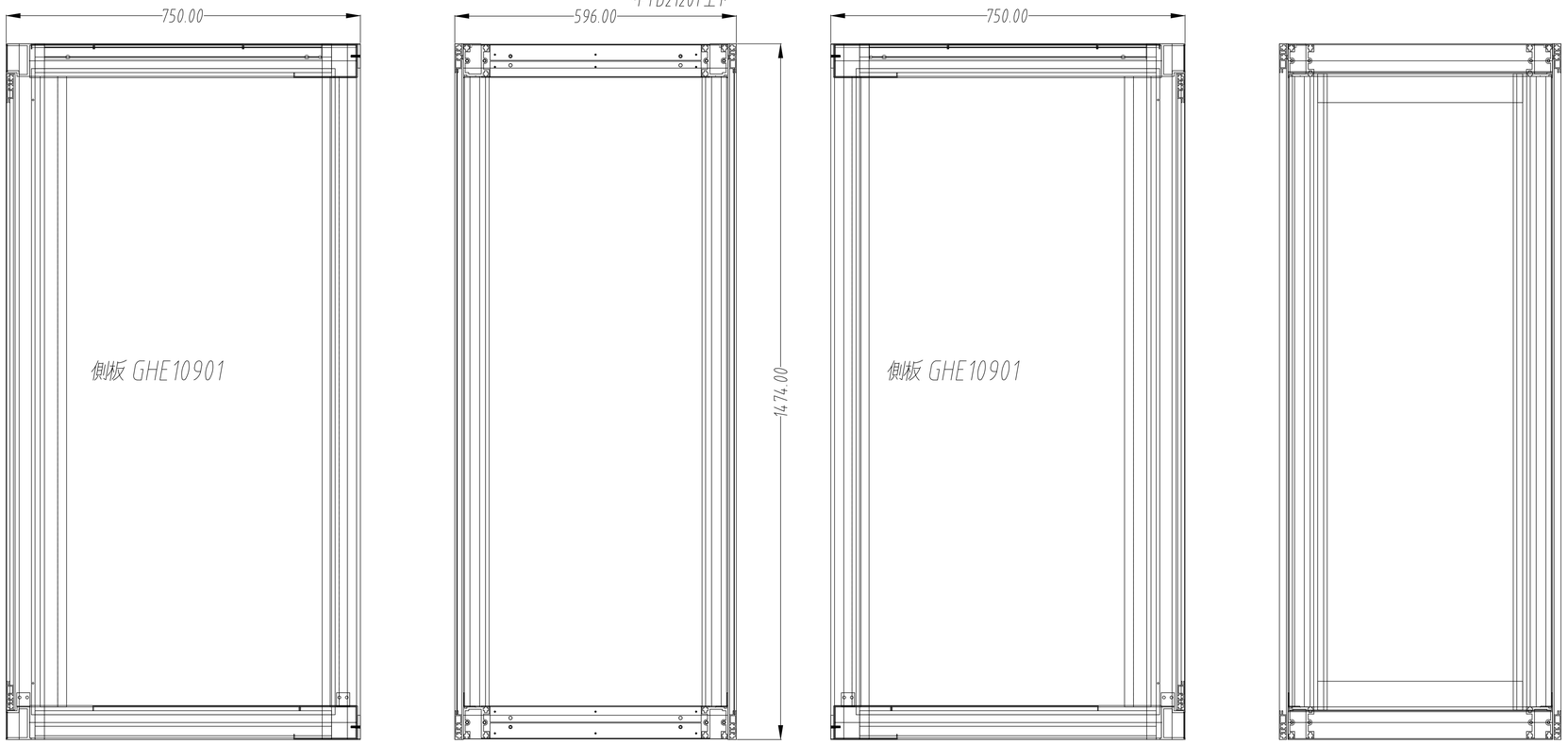

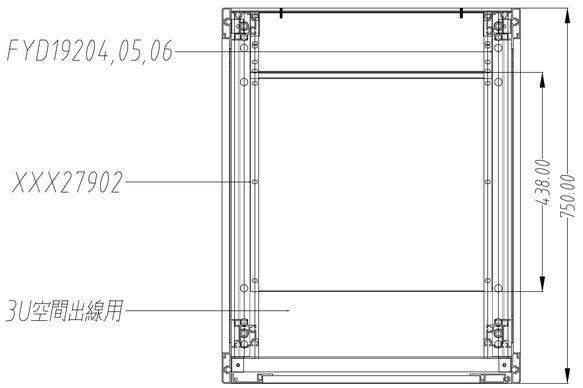

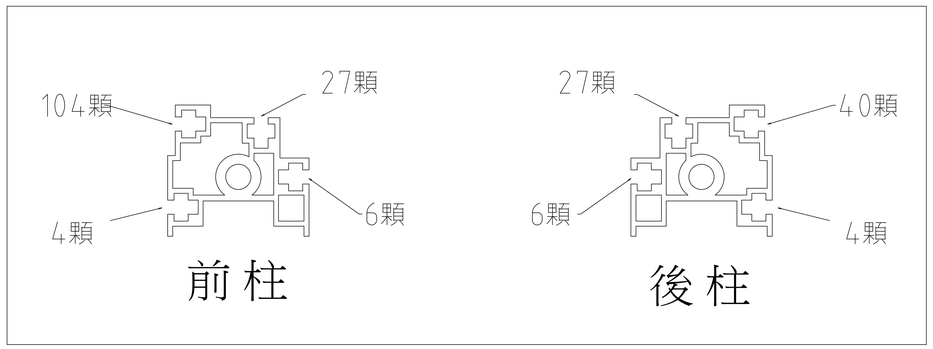

PowerNex	MATERIAL:		DWG NAME: RA-30U-750機櫃
	FINISH: 粉體烤漆 -306		DWG. NO: 系統電源
NOTE:	TOL. ANGLES ±0.5° / L.F. / . ±0.35 UP to 100 ±0.2mm / .x ±0.25 100 to 200 ±0.3mm / .xx ±0.15 200 to 300 ±0.4mm / .xxx ±0.15 300 to 400 ±0.5mm	DATE: 2023-04-25	P/NO: P××2RA-30-750
		SCALE: 1 : 1 / UNIT: mm	
		SHEET: 1 OF 1 / R0	