**TYPE No.**：CP24B-A2E□□

- □：Lens Color (B:Black, G:Green, R:Red, S:Blue, W:White, Y:Yellow)
- □：Contact (10:1NO, 20:2NO, 01:1NC, 02:2NC, 11:1NO 1NC)
- E：Standard
- A2：Maintained Extended
- CP24B：CP2 Metal Bezel Pushbotton Switch

**ORDER No.**：CP24B-A2E□□

## Product Specifications

RoHS Compliant

| | |
|---|---|
| Mechanical life | : >250,000 operations |
| Electrical life | : >100,000 operations |
| Electrical durability | : 1,000,000 cycles AC-15, 230V/1.6A<br>1,000,000 cycles DC-13, 24V/0.6A |
| Rate insulation voltage | : 400V |
| Rated thermal current | : 8A |
| Contact resistance | : 100mΩ max. (at 1A 6-8V DC) |
| Insulation resistance | : 100MΩ min. (at 500V DC) |
| Dielectric strength | : 2000V AC 50/60 HZ for 1 min |
| Degree of protection | : IP66, Type 4X Indoor use only & Type 13<br>IP30 (under panel) |
| Storage temperature | : -40°C to +85°C |
| Operating temperature | : -25°C to +70°C |
| Operating humidity | : 45% to 85% RH |
| Approved standards | : UL508(CSA C22.2 No.14), UL1059<br>A300 Q300,IEC 60947-5-1,GB/T 14048.5 |
| Hazardous substances | : Corresponding RoSH and REACH |
| Wire diameter | : 16~26 AWG, 0.2~1.5mm^2 |
| Stripping length | : 8mm |

## Contact Block Mounting Position

| | | | Operator Position | | |
|---|---|---|---|---|---|
| Configuration | Contact | Position | Free | Push | Contact Part |
| 10 | ① | NO | | ● | SCP2-E10P |
| | ② | — | | | Empty Contact |
| 20 | ① | NO | | ● | SCP2-E10P |
| | ② | NO | | ● | SCP2-E10P |
| 01 | ① | NC | ● | | SCP2-E01P |
| | ② | — | | | Empty Contact |
| 02 | ① | NC | ● | | SCP2-E01P |
| | ② | NC | ● | | SCP2-E01P |
| 11 | ① | NO | | ● | SCP2-E10P |
| | ② | NC | ● | | SCP2-E01P |

## Contact Ratings

| Rated Insulation Voltage (Ui) | | 400V | | | | |
|---|---|---|---|---|---|---|
| Rated Thermal Current (Ith) | | 8A | | | | |
| Rate Operational Voltage (Ue) | | 12V | 30V | 120V | 240V | 380V |
| AC 50/60HZ | Resistive Load (AC-12) (Ie) | 8A | 8A | 8A | 6A | 3.8A |
| | Inductive Load (AC-15) (Ie) | 8A | 8A | 6A | 3A | 1.9A |
| Rate Operational Voltage (Ue) | | 12V | 30V | 125V | 250V | 400V |
| DC | Resistive Load) (DC-12) (Ie) | 2.5A | 2.5A | 1.1A | 0.55A | 0.3A |
| | Inductive Load (DC-13) (Ie) | 2.5A | 2.3A | 0.55A | 0.27A | 0.15A |

## Hole Dia

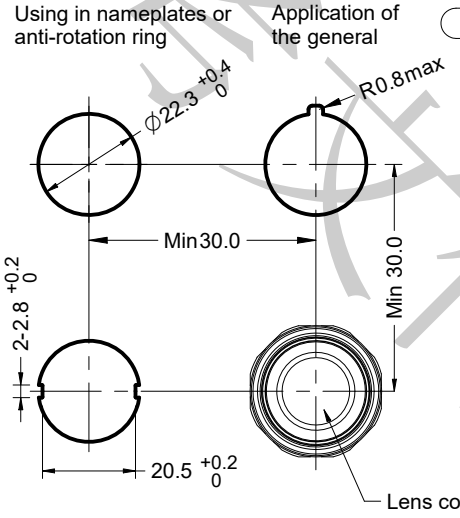


## Pushbotton Switches

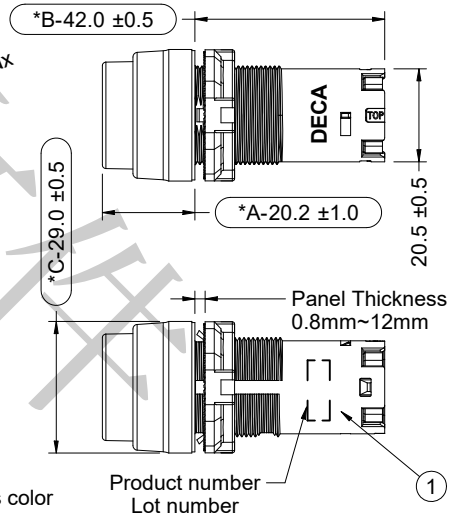


## Component

| Item | Name | Material | Number |
|---|---|---|---|
| 1 | CP24B-A2E | — | 1 |
| 2 | Partition | PA66 | 1 |
| 3 | Contact ① | — | 1 |
| 4 | Contact ② | — | 1 |
| | Empty Contact | PA66+G20 | |

TOP

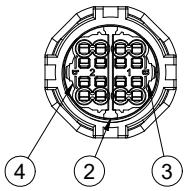


| DECA® SwitchLab Inc. | | | PART NAME | UNIT | SCALE |
|---|---|---|---|---|---|
| | | | CP2 Metal Bezel Pushbotton Switches | mm | 0.6 : 1 |
| DESIGN | CHECK | APPROVE | DRAWING NO. | | SHEET |
| DATE 2022/11/17 | DATE 2022/11/17 | DATE 2022/11/17 | CP24B-A2E□□ | | 1 / 1 |

| A |
|---|
| REV. |

THIS DRAWING CONTAINS INFORMATION THAT IS PROPRIETARY TO DECA SWITCHLAB INC AND SHOULD NOT BE USED WITHOUT WRITTEN PERMISSION. (本圖未經許可 禁止翻印 保留或傳閱 違者必究)