RoHS (2011/65/EU) COMPLIANT

CUSTOMER:	P/N: 8002.079	REV.	APPROVED BY:

REVISIONS

REV.	DESCRIPTION	DATE
F		08.05.20
G		09.04.08
H		2011/05/25
I		2011/11/09
J		2012/01/05
K		2014/06/24
L	Update the tail print and notes 2.3	2018/12/14

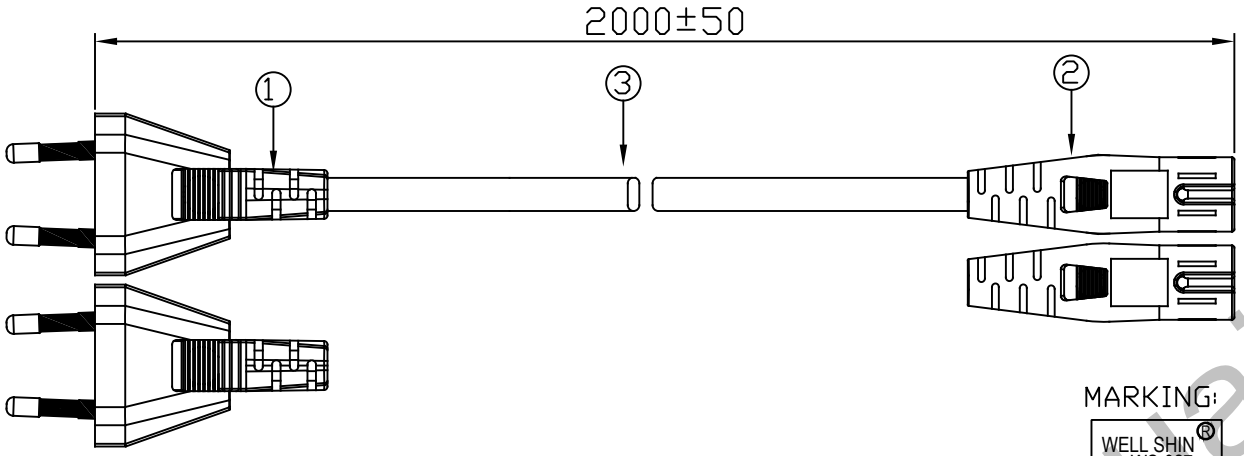

NOTES:

1. Tail insert and wire increase "CE" MARK.
2. ZH(Zhang Hwa) factory begin from revision H
3. RoHS shown on the carton

MARKING:

WELL SHIN®
WS-006
2.5A 250V~

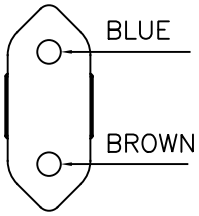

CEE 7/16
EUROPEAN 2

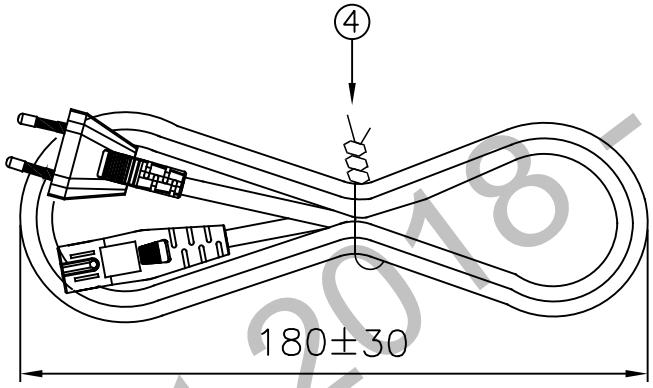

MARKING:

WELL SHIN®
WS-027
2.5A 250V~

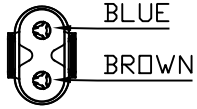

IEC-60320-C7

ITEM	DESCRIPTION	COLOR	Q'TY
4	Cable tie	BLACK	1
3	H03VVH2-F 0.75MMSQ*2C APPROVAL :EUROPEAN,CE	BLACK	1
2	WS-027 2.5(A) 250(V) APPROVAL :ENEC,CE	BLACK	1
1	WS-006 2.5(A) 250(V) APPROVAL :EUROPEAN,EAC	BLACK	1

	SIGNATURE
SAFETY ENGINEER:	
MANAGER BY:	
CHECKED BY:	
DRAWN BY:	

QUAIL ELECTRONICS, INC.
http://www.quail.com

PRODUCT NO.: 006+027 DATE: 2018/12/14
UNIT: mm SHEET: 1 OF 1 REV.
DWG NO: 0096-0054 L

THE INFORMATION CONTAINED HEREIN IS PROPRIETARY TO QUAIL ELECTRONICS, INC. ANY USE OR DISCLOSURE OF THIS INFORMATION, EXCEPT FOR THE EXCLUSIVE BENEFIT OF QUAIL ELECTRONICS, INC. IS PROHIBITED.

Copyright 2018 - Quail Electronics