RoHS (2011/65/EU) COMPLIANT

CUSTOMER:	P/N: 8580.098 REV.	APPROVED BY:

REVISIONS

REV.	DESCRIPTION	DATE
K		2011/06/07
L		2012/02/29
M		2012/11/13
N		2013/04/19
O		2013/04/30
P	Head and tail changed to no safety, update note 1.2	2018/08/03

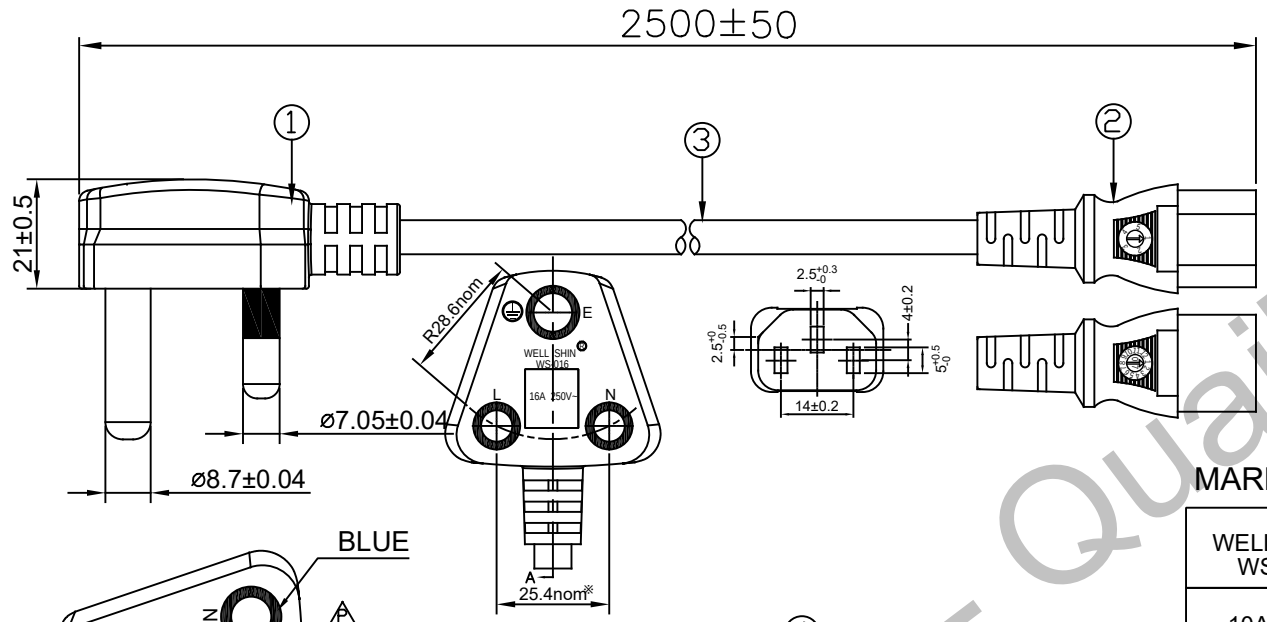

NOTES:

1. ZH(Zhang Hwa) factory begin from revision J
2. RoHS shown on the carton

MARKING:

WELL SHIN® WS-002
10A 250V~

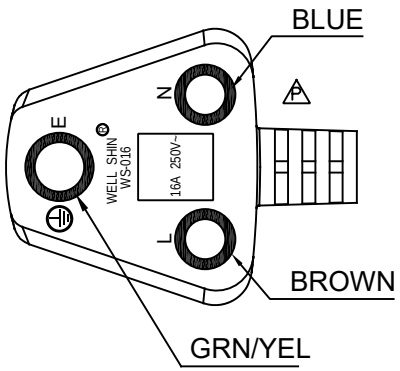

SANS 60799
SOUTH AFRICAN

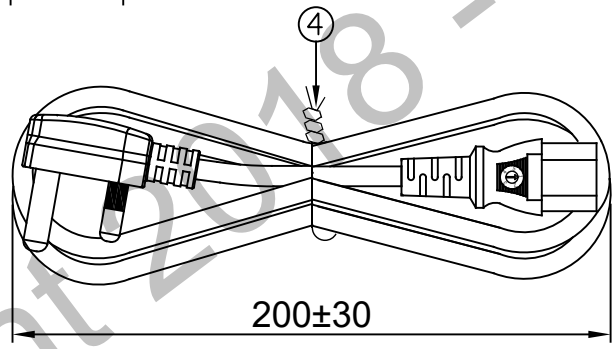

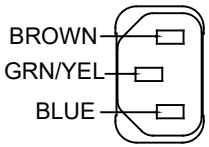

IEC-60320-C13

ITEM	DESCRIPTION		COLOR	Q'TY
④	Cable tie		BLACK	1
③	H05VV-F 1.0MMSQ*3G	APPROVAL : EUROPEAN	BLACK	1
②	WS-002 10 (A) 250(V)	APPROVAL : NONE	BLACK	1
①	WS-016 16 (A) 250(V)	APPROVAL : NONE	BLACK	1

	SIGNATURE
SAFETY ENGINEER:	
MANAGER BY:	
CHECKED BY:	
DRAWN BY:	

QUAIL ELECTRONICS, INC.
http://www.quail.com

PRODUCT NO.: 016+002-1 DATE: 2018/08/03
UNIT: mm SHEET: 1 OF 1 REV.
DWG NO: 0096-0099 P

THE INFORMATION CONTAINED HEREIN IS PROPRIETARY TO QUAIL ELECTRONICS, INC. ANY USE OR DISCLOSURE OF THIS INFORMATION, EXCEPT FOR THE EXCLUSIVE BENEFIT OF QUAIL ELECTRONICS, INC. IS PROHIBITED.

Copyright 2018 - Quail Electronics