ARRANGEMENT OF CONTACTS

PARTS	3P	4P	5P	6P	7P	8P
ANGLE	180°	216°	180°	240°	270°	270°
POSITION OF VIEWS	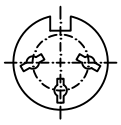	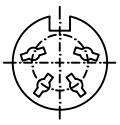	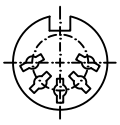	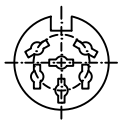	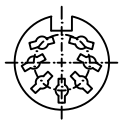	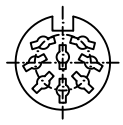

SPECIFICATIONS

Contact resistance 20mΩ Max.
Dielectric strength 1,000V AC/1 Minute
Insulation resistance 100MΩ Min. at 500V DC
Rating 100V AC 2A

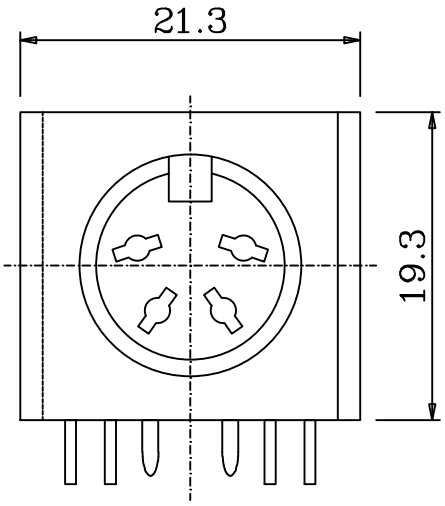

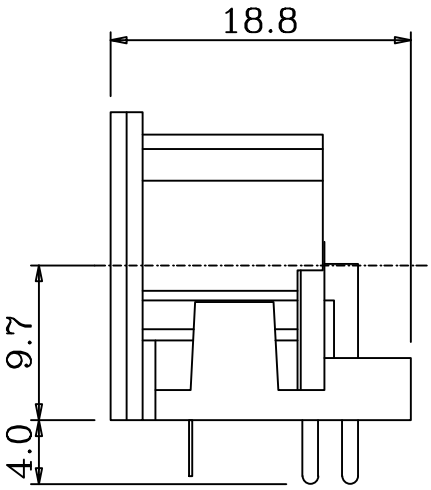

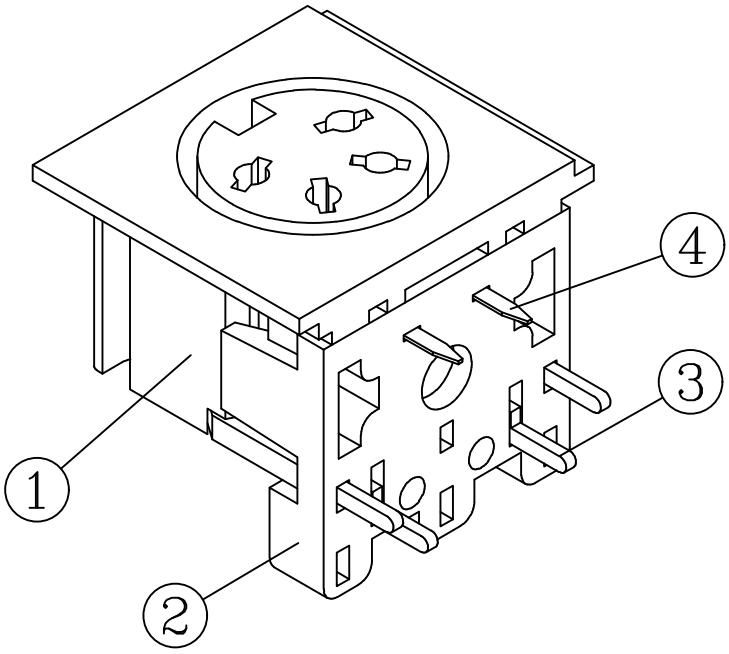

P.C.B. LAYOUT HOLE

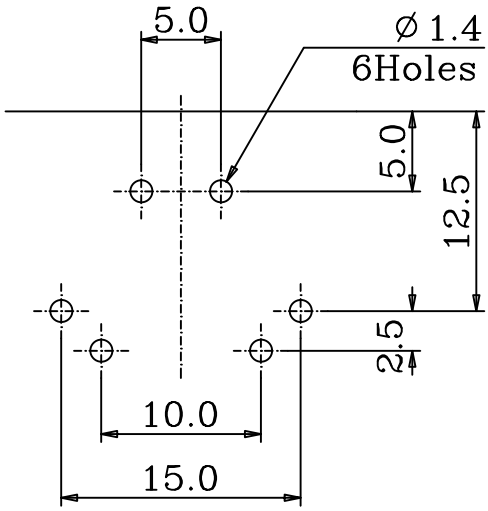

P/N	PART NAME	Q'TY	MATERIAL		PLATING	REMARKS
4	EARTH TERMINAL	1	BSR-H (0.2t)	[C1519R-H]	NICKEL PLATED	30-50u"
3	CONTACT TERMINAL	4	BSR-H (0.7t)	[C2680R]	TIN PLATED	30-50u"
2	BASE	1	PBT	[D202G15]		UL94V-0
1	MAIN BODY	1	PBT	[D202G15]		UL94V-0

DATE 980828	SCALE 2 : 1	UNIT M/M	MODEL NO. B-1001	4 P	216° JACK
CONNECTORS					
FILE NO. HSP-BF-B1001-4P					
DESIGN H. S. P.	DRAFTSMAN C. C. U.	APPREVE T. S. L.	H.S.P. CONNECTOR CO., LTD.		