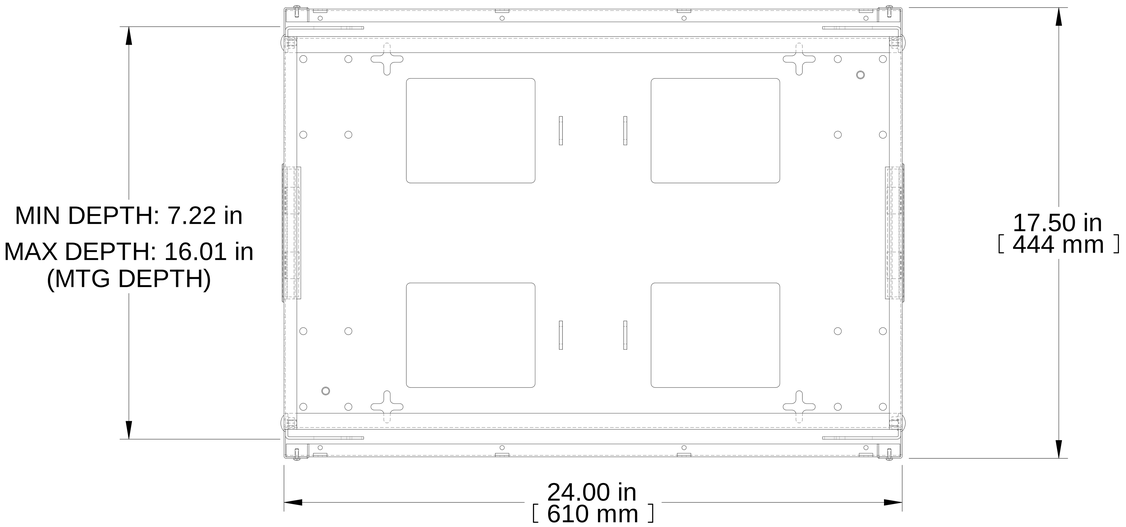


TOP VIEW
COVER REMOVED

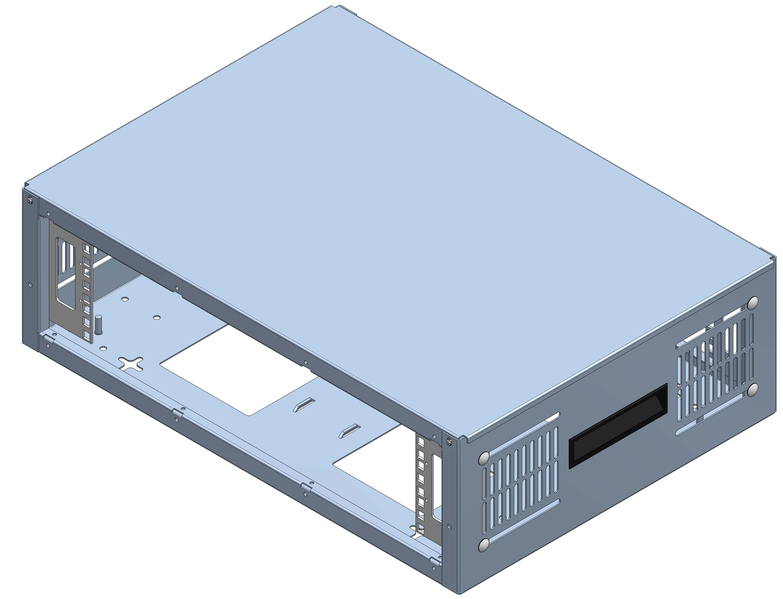

ISOMETRIC

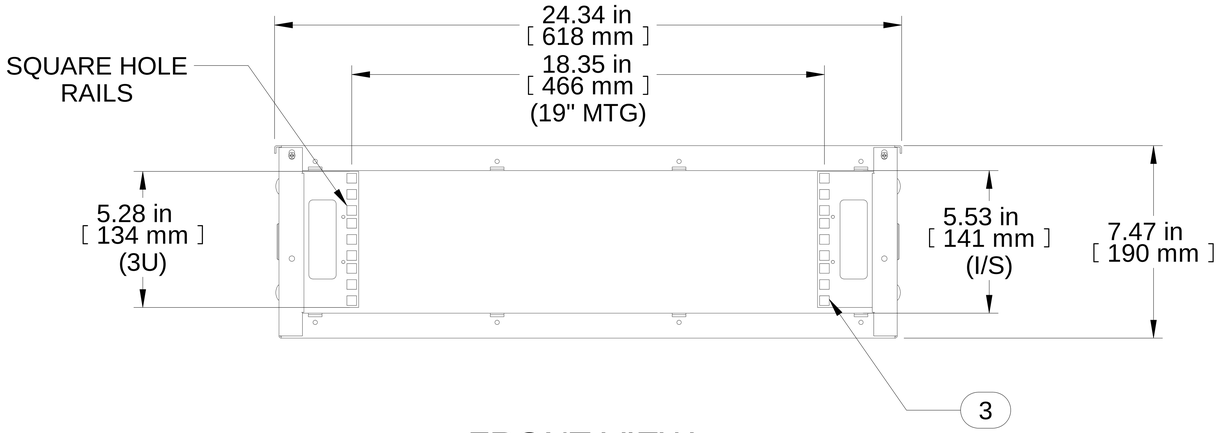


FRONT VIEW

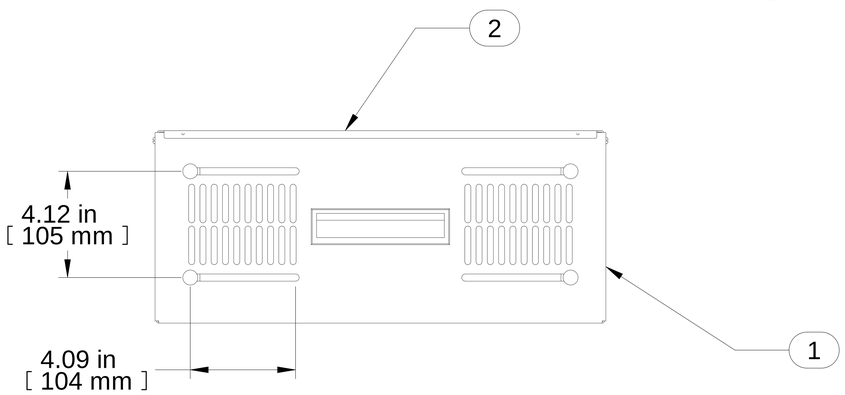


R.S. VIEW

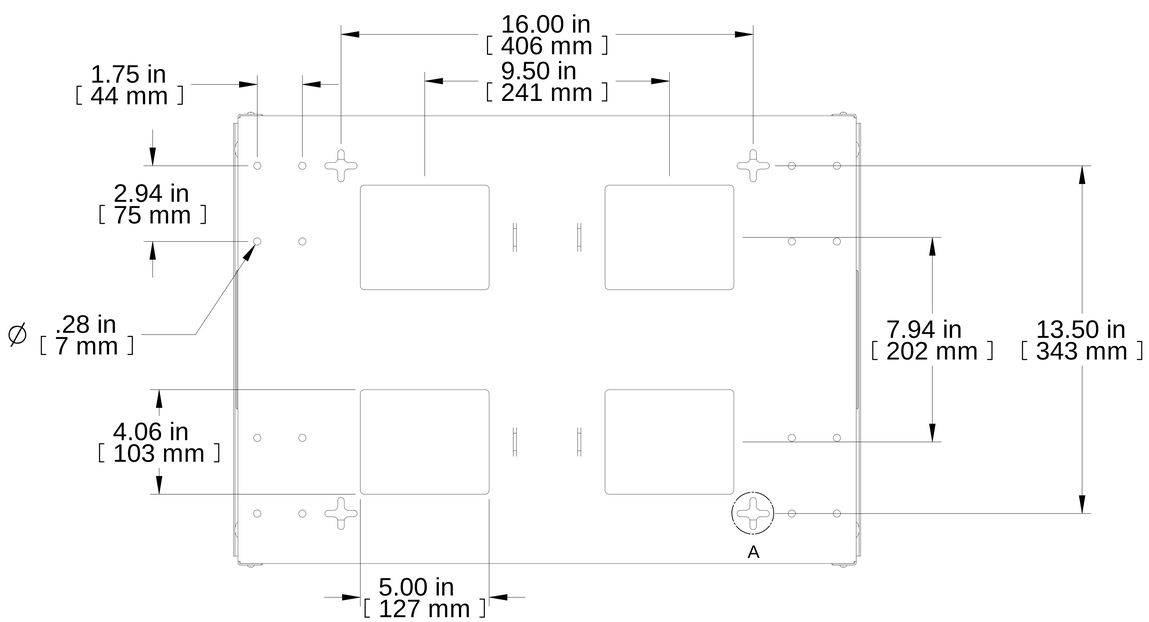


BOTTOM VIEW

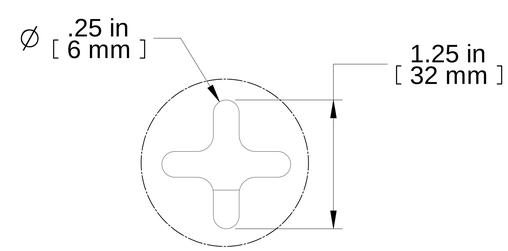


DETAIL A
SCALE 4:1

| Item Number | Title | Quantity |
|---|---|---|
| 1 | SDC - BODY | 1 |
| 2 | SDC COVER ASSEMBLY | 1 |
| 3 | RAIL | 4 |

**PART NUMBERS**

| | |
|---|---|
| SDC243U17 | PAINTED BLACK TEXTURED |

**NOTES**

Assembly Hardware Included
Mounting Hardware Not Included
See Hammond Website for Accessories (Door/Panel)

**Français**

Pour tous les détails sur nos produits,
svp veuillez consulter notre site www.hammondmfg.com

Data subject to change without notice. Isometric drawing not to scale.
Les données sont sujettes à changement sans préavis.

HAMMOND MANUFACTURING®

www.hammondmfg.com

**PART NO.** **SDC243U17BK**