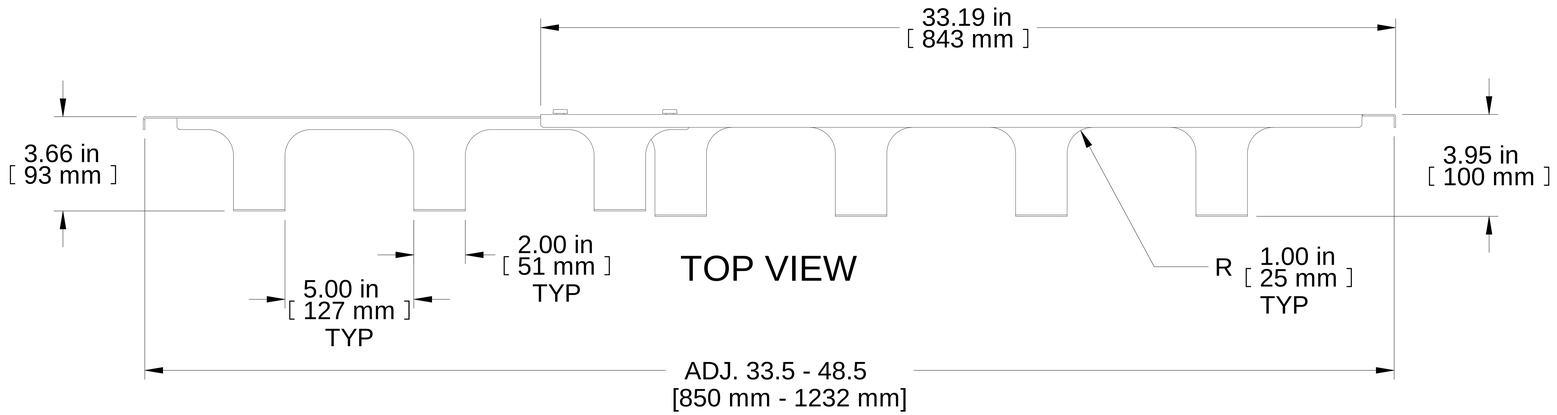

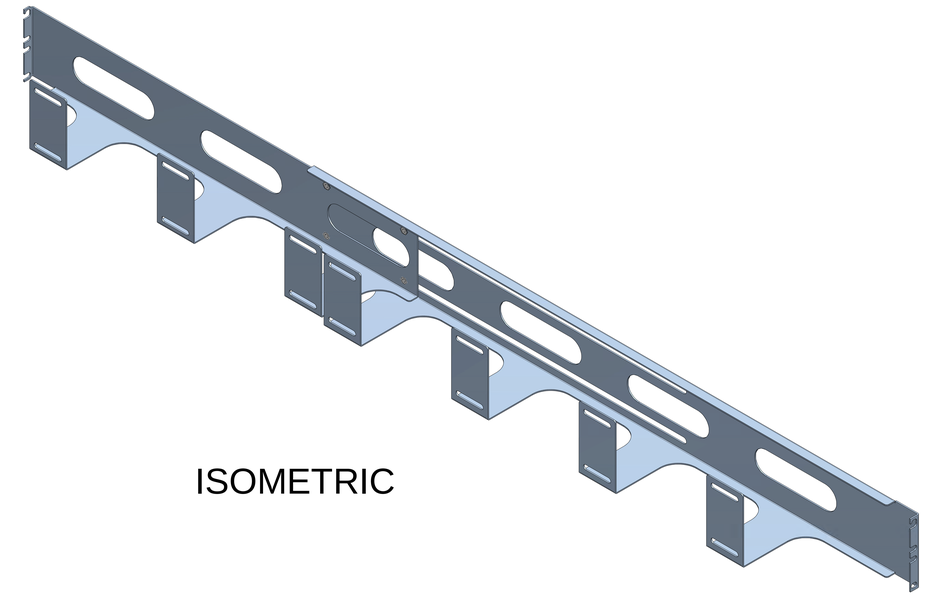

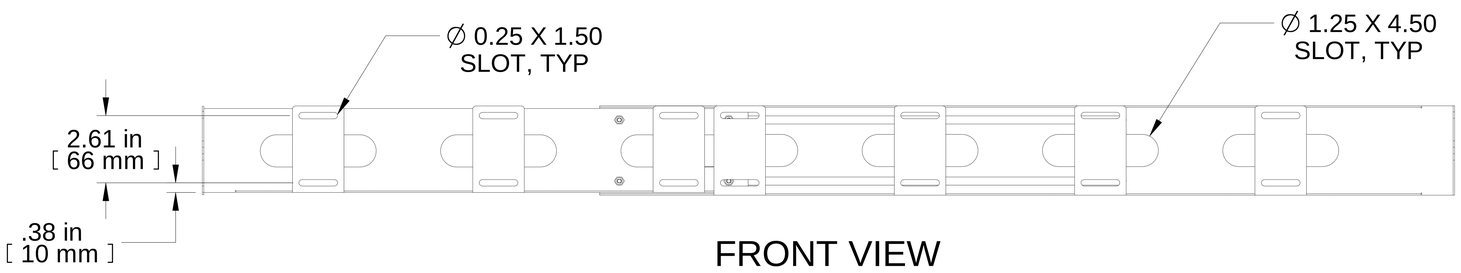

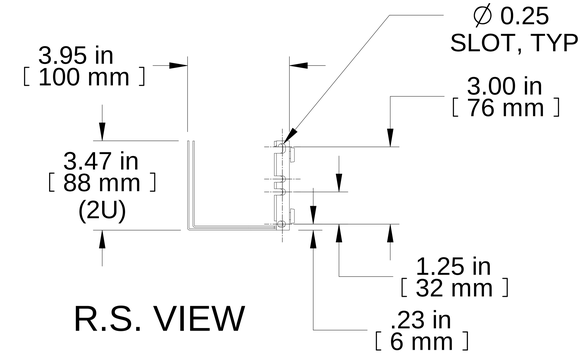

PART NUMBERS	
RDCM3348BK	PAINTED BLACK SMOOTH

NOTES
MOUNTING HARDWARE NOT INCLUDED
ADJUSTABLE FLOATING DESIGN
COMPATIBLE WITH CABINETS & 4 POST RACKS

Data subject to change without notice. Isometric drawing not to scale.
Les données sont sujettes à changement sans préavis.

HAMMOND MANUFACTURING®

www.hammondmfg.com

PART NO. **RDCM3348BK**