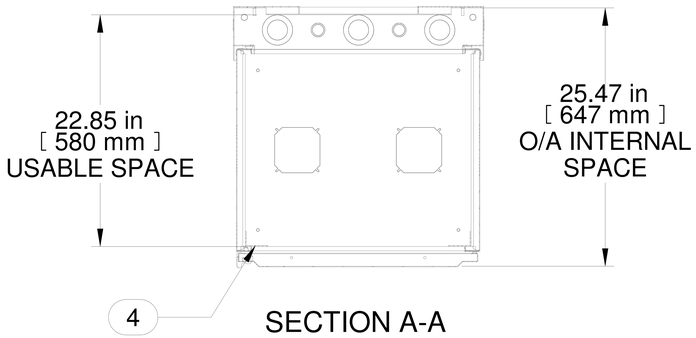

SECTION A-A

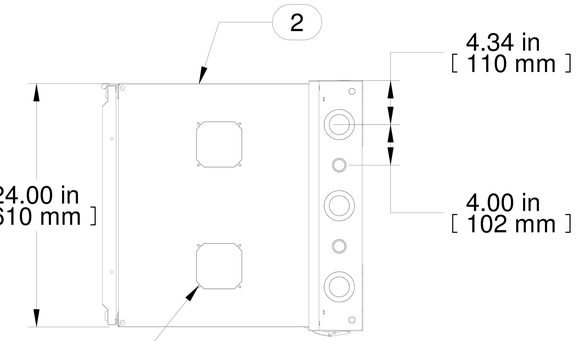

TOP VIEW

FAN KNOCKOUT PATTERN
OPTIONAL FANS:
DNMF100AC115
DNMF100AC230

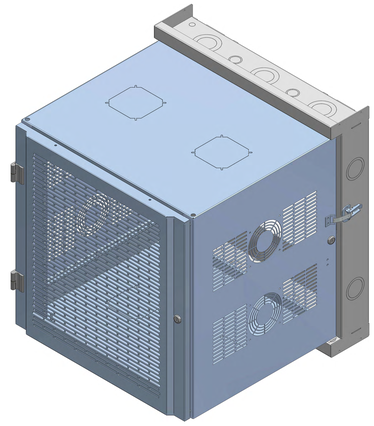

ISOMETRIC

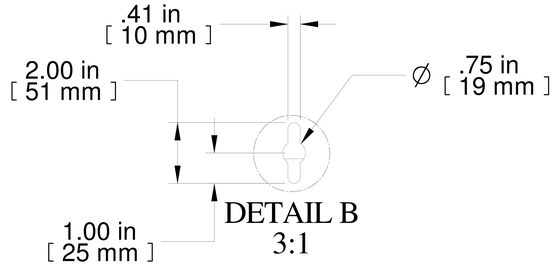

DETAIL B
3:1

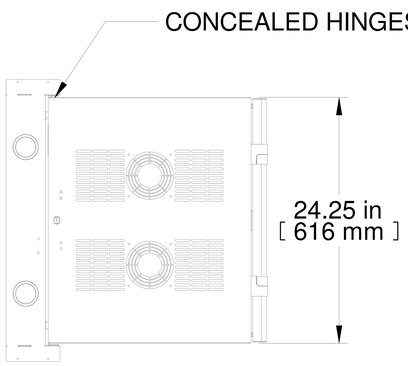

L.S. VIEW

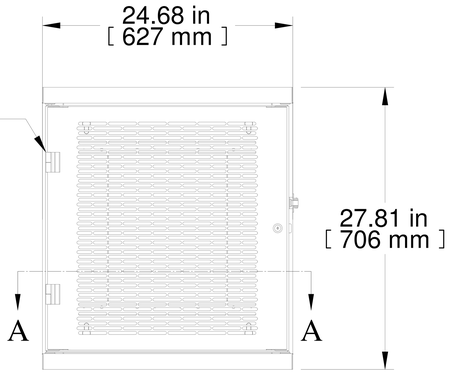

FRONT VIEW

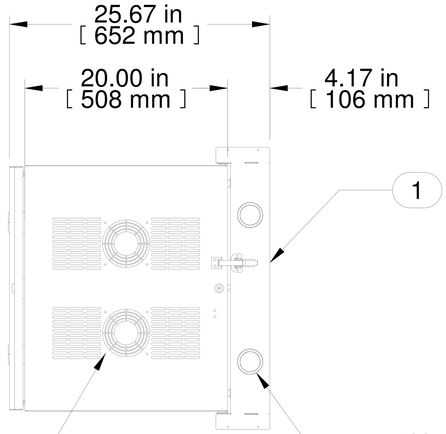

R.S. VIEW

2X
DOUBLE K.O.
∅2.00∅2.50
BOTH SIDES

FAN CUTOUT PATTERN:
OPTIONAL FANS:
DNMF100AC115
DNMF100AC230

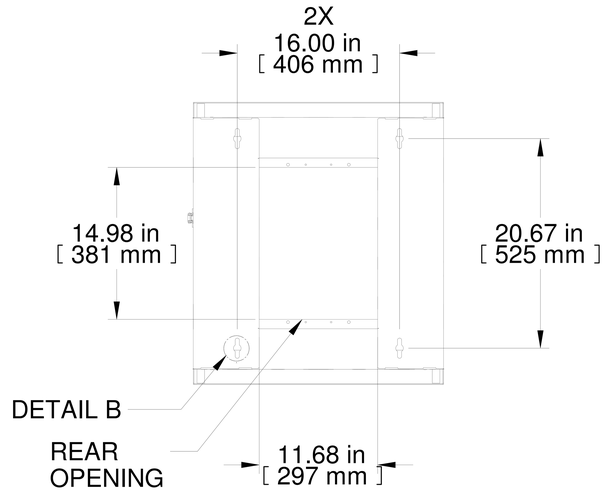

REAR VIEW

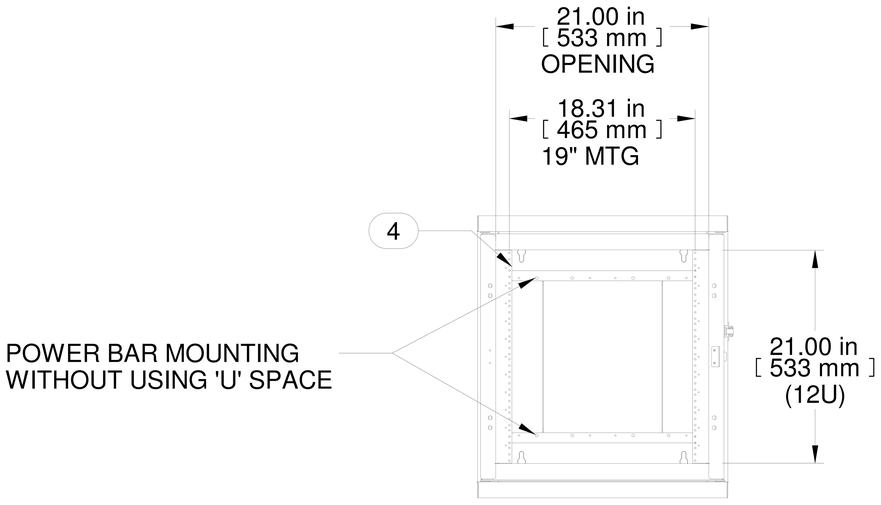

FRONT VIEW
DOOR REMOVED

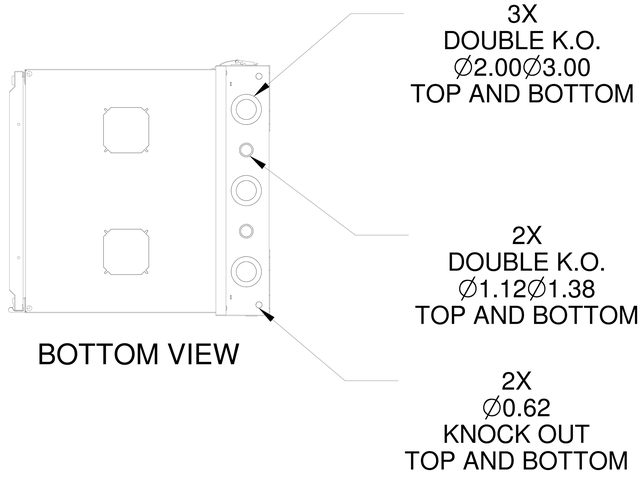

BOTTOM VIEW

Item Number	Title	Quantity
1	HWM REAR SECTION 24W 12U	1
2	HWM - CENTRE SECTION	1
3	HWM - VENTED DOOR ASSY	1
4	19" TAPPED PANEL RAILS (PAIR)	1

PART NUMBERS

HWM2412U20BK PAINTED BLACK SAND TEXTURED VENTED FRONT DOOR

NOTES

See Hammond Website for Additional Accessories

Français

Pour tous les détails sur nos produits,
svp veuillez consulter notre site www.hammondmfg.com
Data subject to change without notice. Isometric drawing not to scale.
Les données sont sujettes à changement sans préavis.

HAMMOND MANUFACTURING®
www.hammondmfg.com

PART NO. HWM2412U20BK